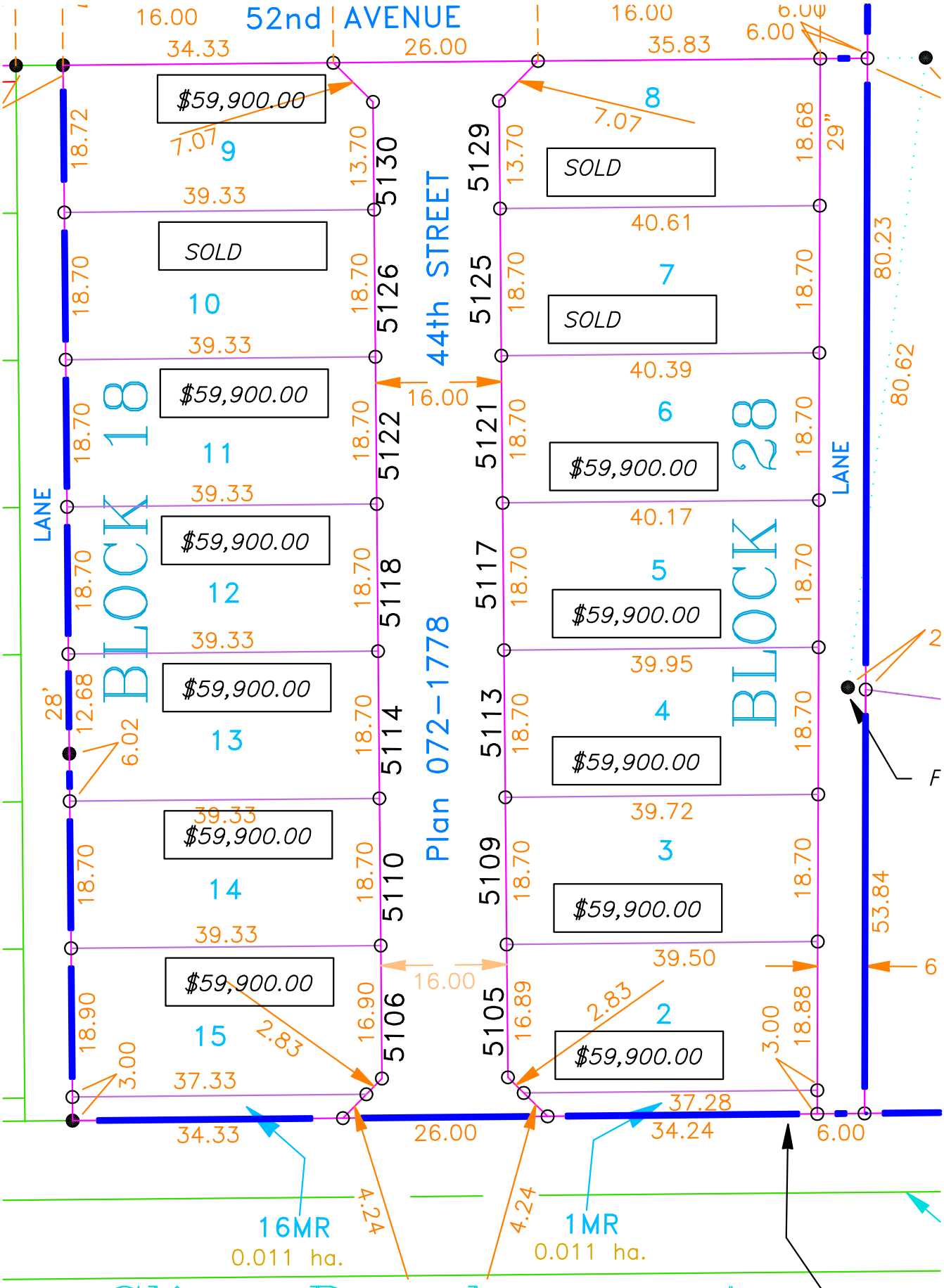

Clive Developments

(403) 347-8447